Multiple Stacks for SO2R

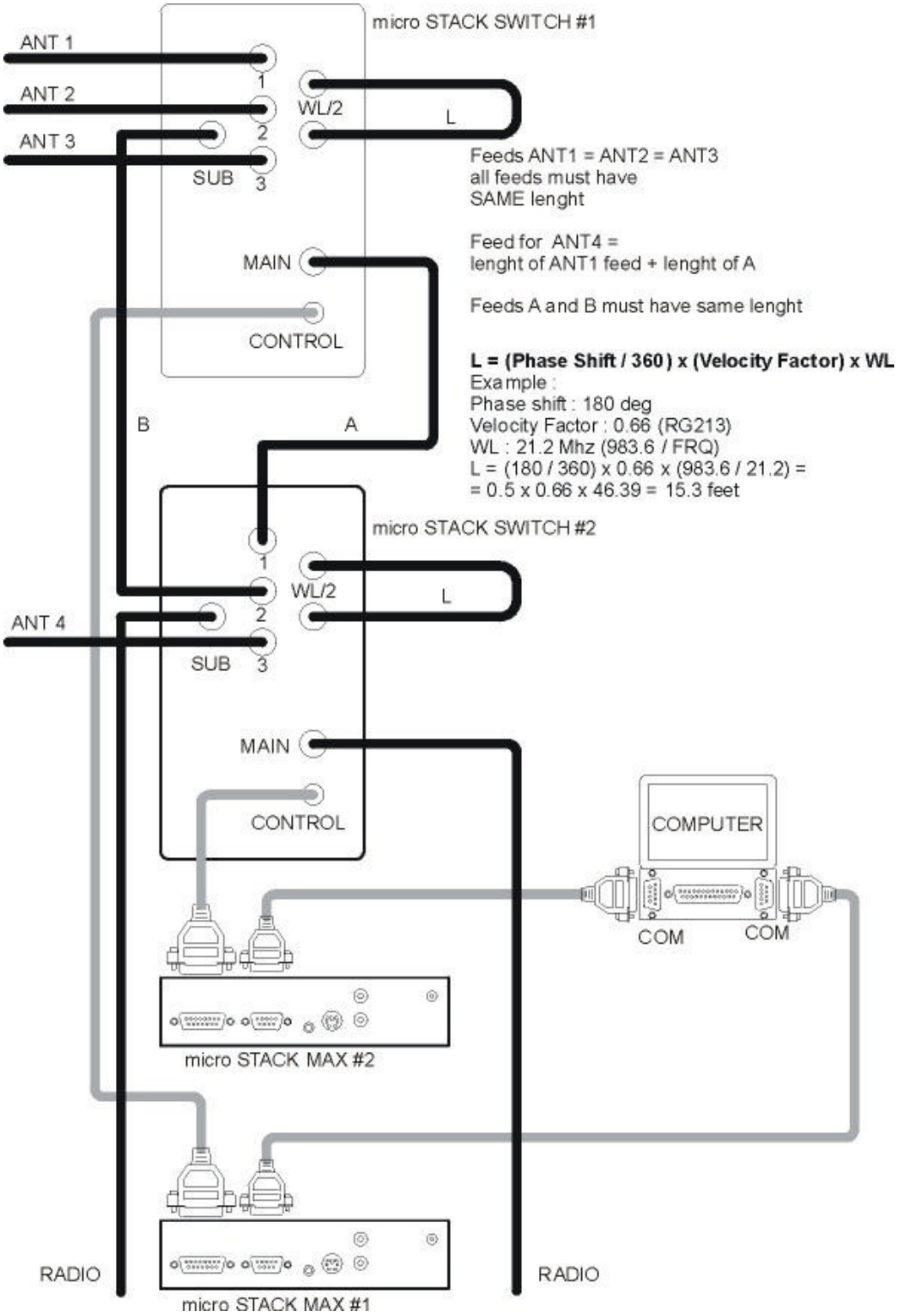

Copyright © *micro*HAM™